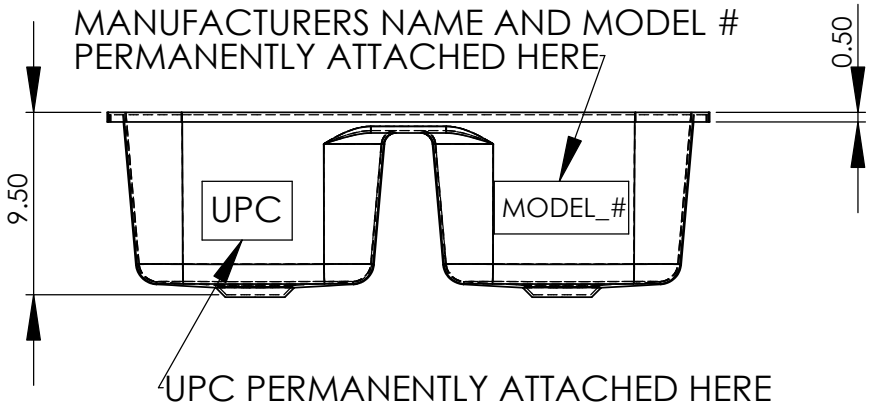

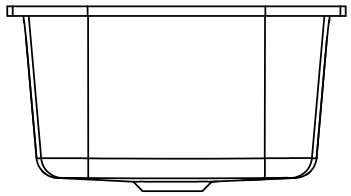

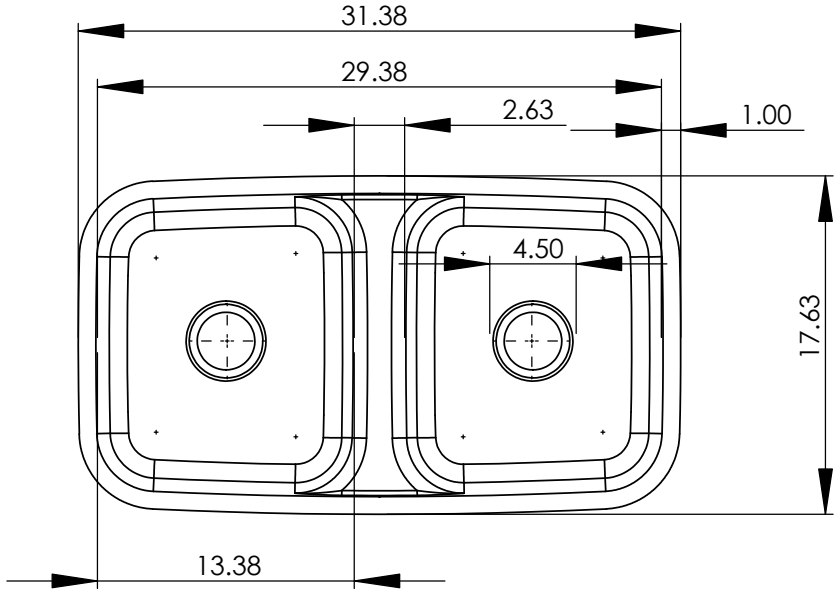

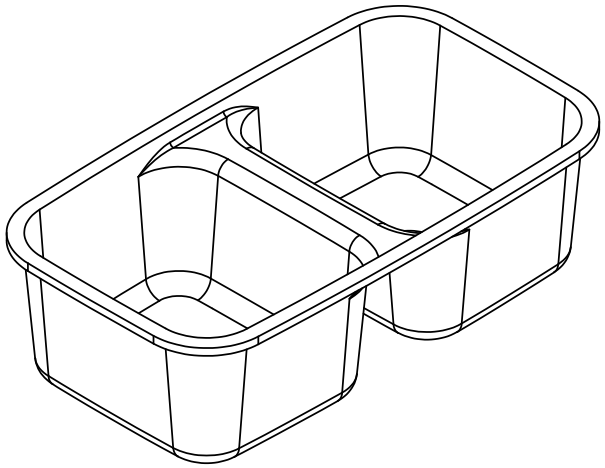

PROPRIETARY AND CONFIDENTIAL

THE INFORMATION CONTAINED IN THIS DRAWING IS THE SOLE PROPERTY OF CLARKE PRODUCTS INC. ANY REPRODUCTION IN PART OR AS A WHOLE WITHOUT THE WRITTEN PERMISSION OF CLARKE PRODUCTS INC. IS PROHIBITED.

NEXT ASSY	USED ON
APPLICATION	

UNLESS OTHERWISE SPECIFIED:

DIMENSIONS ARE IN INCHES
TOLERANCES:
FRACTIONAL ±
ANGULAR: MACH ± BEND ±
TWO PLACE DECIMAL ±
THREE PLACE DECIMAL ±

INTERPRET GEOMETRIC TOLERANCING PER:

MATERIAL
AC, .197, WH, 24"x36"

FINISH
SATIN

DO NOT SCALE DRAWING

	NAME	DATE
DRAWN	H. GAMSJAGER	2/12/2007
CHECKED		
ENG APPR.		
MFG APPR.		
Q.A.		

COMMENTS:

CLARKE PRODUCTS INC.

TITLE:

Undermount Sink
KSU-AMSAT

SIZE	DWG. NO.	REV
A	Americana	

SCALE: 1:10 WEIGHT: SHEET 1 OF 1

5 4 3 2 1